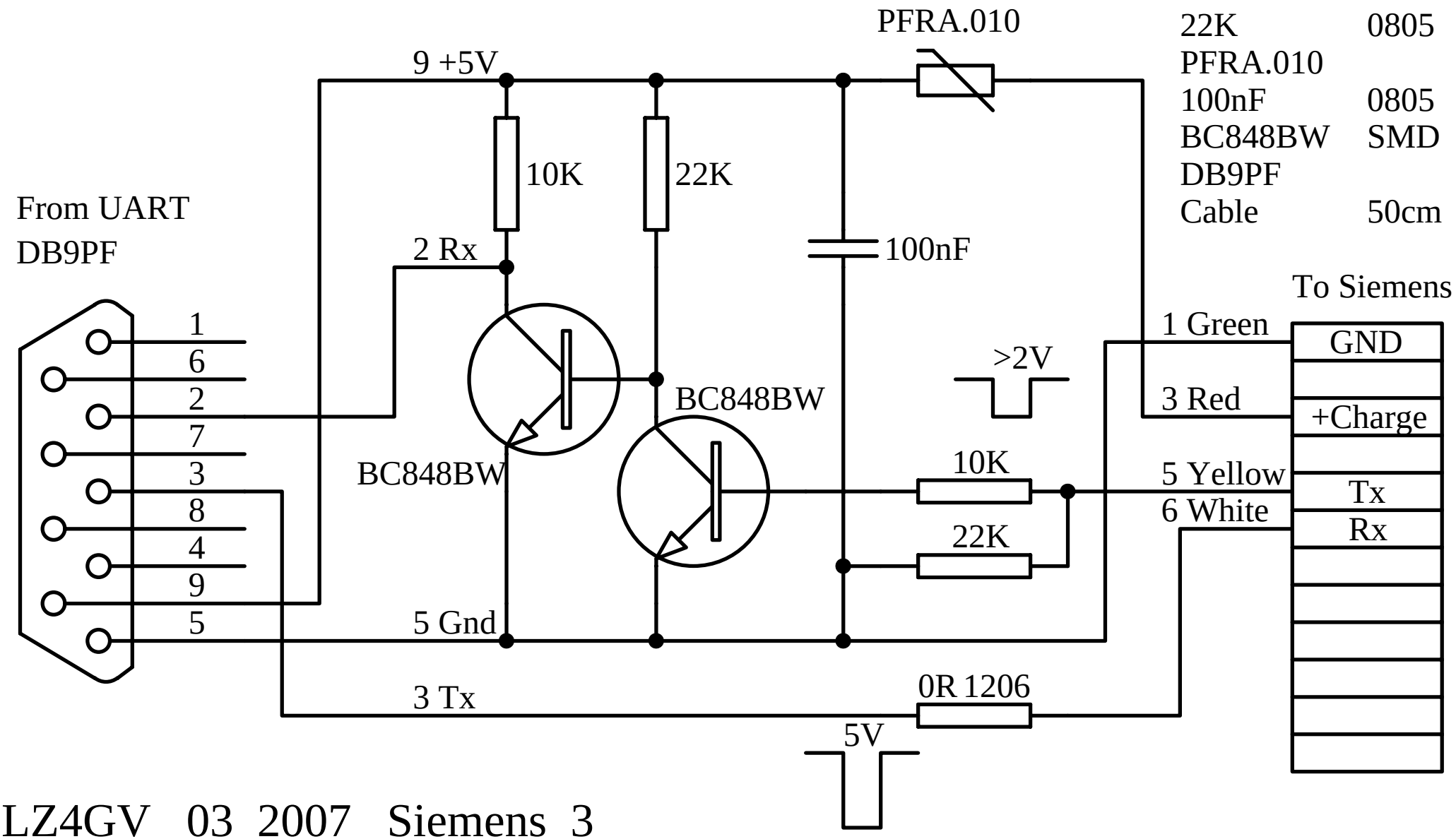

0R	1206	1
10K	0805	2
22K	0805	2
PFRA.010		1
100nF	0805	1
BC848BW	SMD	2
DB9PF		1
Cable	50cm	1

LZ4GV 03_2007 Siemens_3