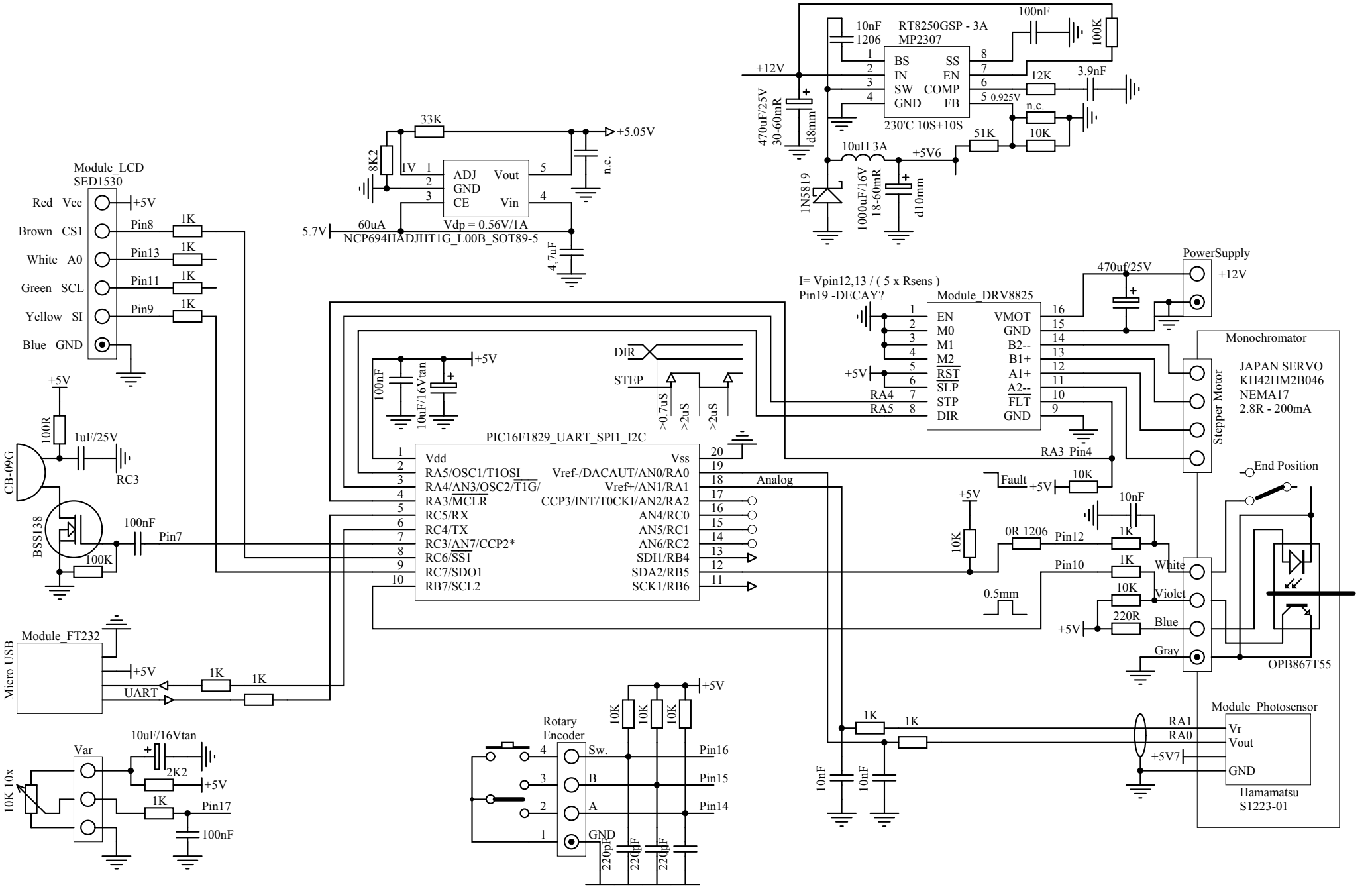

www.lz4gv.com 2017-2018 Spectrophotometer_03