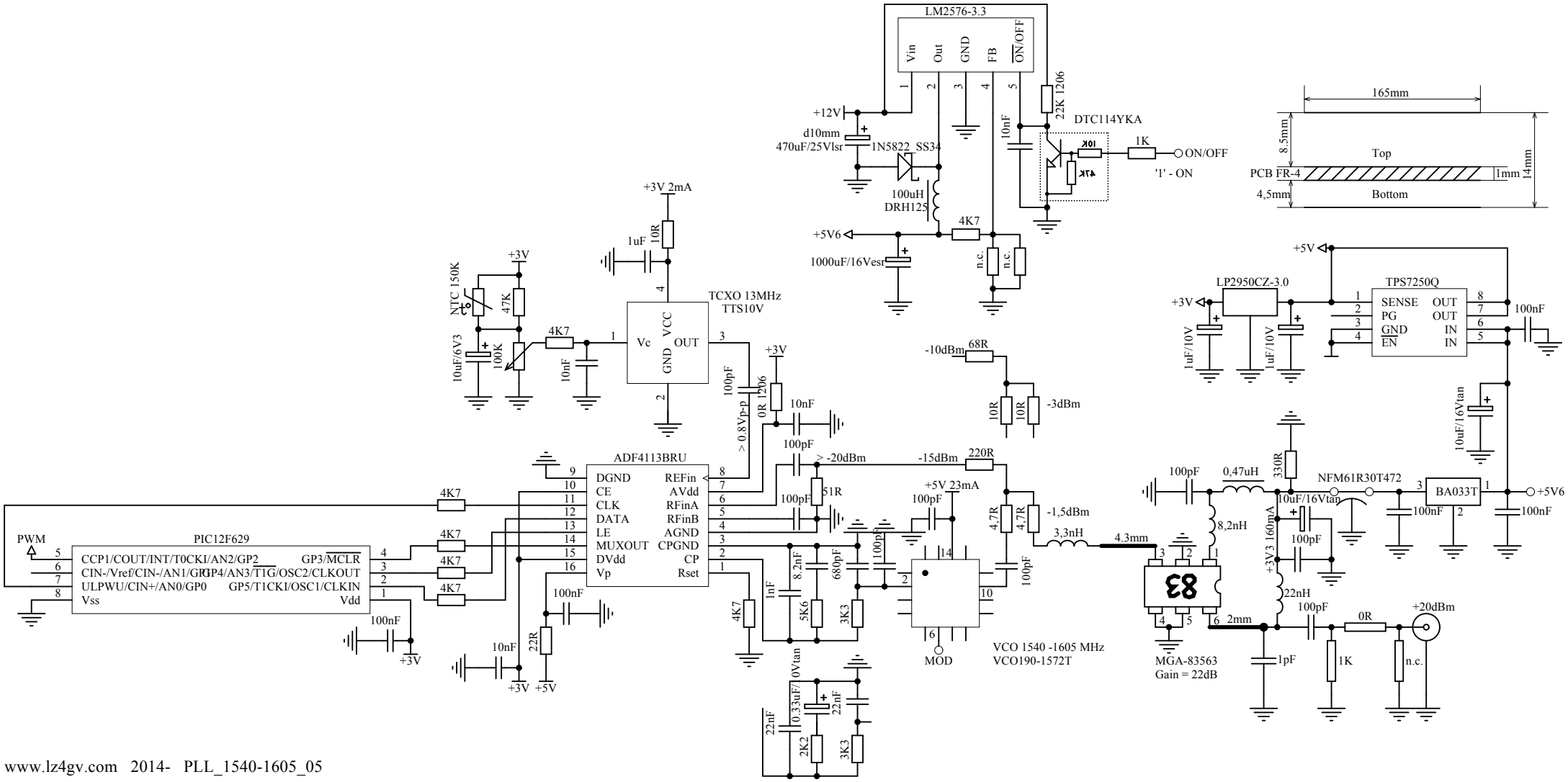
LM2576-3.3
Vin
Out
GND
FB
ON/OFF
+12V
d10mm
470uF/25Vlsr
1N5822_SS34
100uH
DRH125
+5V6
1000uF/16Vesr
4K7
n.c.
10nF
22K 1206
DTC114YKA
1K
ON/OFF
'1' - ON
165mm
8.5mm
Top
PCB FR-4
1mm
14mm
4,5mm
Bottom
+3V 2mA
1uF
10R
TCXO 13MHz
TTS10V
Vc
VCC
GND
OUT
NTC 150K
47K
10uF/6V3
100K
4K7
10nF
100pF
> 0.8Vp-p
0R 1206
10nF
+3V
-10dBm
68R
10R
10R
-3dBm
+5V
LP2950CZ-3.0
1uF/10V
1uF/10V
TPS7250Q
SENSE
PG
GND
EN
OUT
OUT
IN
IN
100nF
10uF/16Vtan
ADF4113BRU
DGND
CE
CLK
DATA
LE
MUXOUT
DVdd
Vp
REFin
AVdd
RFinA
RFinB
AGND
CPGND
CP
Rset
> -20dBm
-15dBm
220R
51R
+5V 23mA
100pF
4,7R
4,7R
-1,5dBm
3,3nH
4.3mm
100pF
0,47uH
330R
NFM61R30T472
BA033T
+5V6
100nF
8,2nH
+3V3 160mA
22nH
2mm
0R
+20dBm
1pF
1K
n.c.
MGA-83563
Gain = 22dB
PWM
PIC12F629
CCP1/COUT/INT/T0CKI/AN2/GP2
CIN-/Vref/CIN-/AN1/GP1
ULPWU/CIN+/AN0/GP0
Vss
GP3/MCLR
GP4/AN3/T1G/OSC2/CLKOUT
GP5/T1CKI/OSC1/CLKIN
Vdd
100nF
+3V
10nF
22R
+3V +5V
1nF
8.2nF
5K6
680pF
3K3
100pF
MOD
VCO 1540 -1605 MHz
VCO190-1572T
0Vtan
0.33uF/
22nF
22nF
2K2
3K3