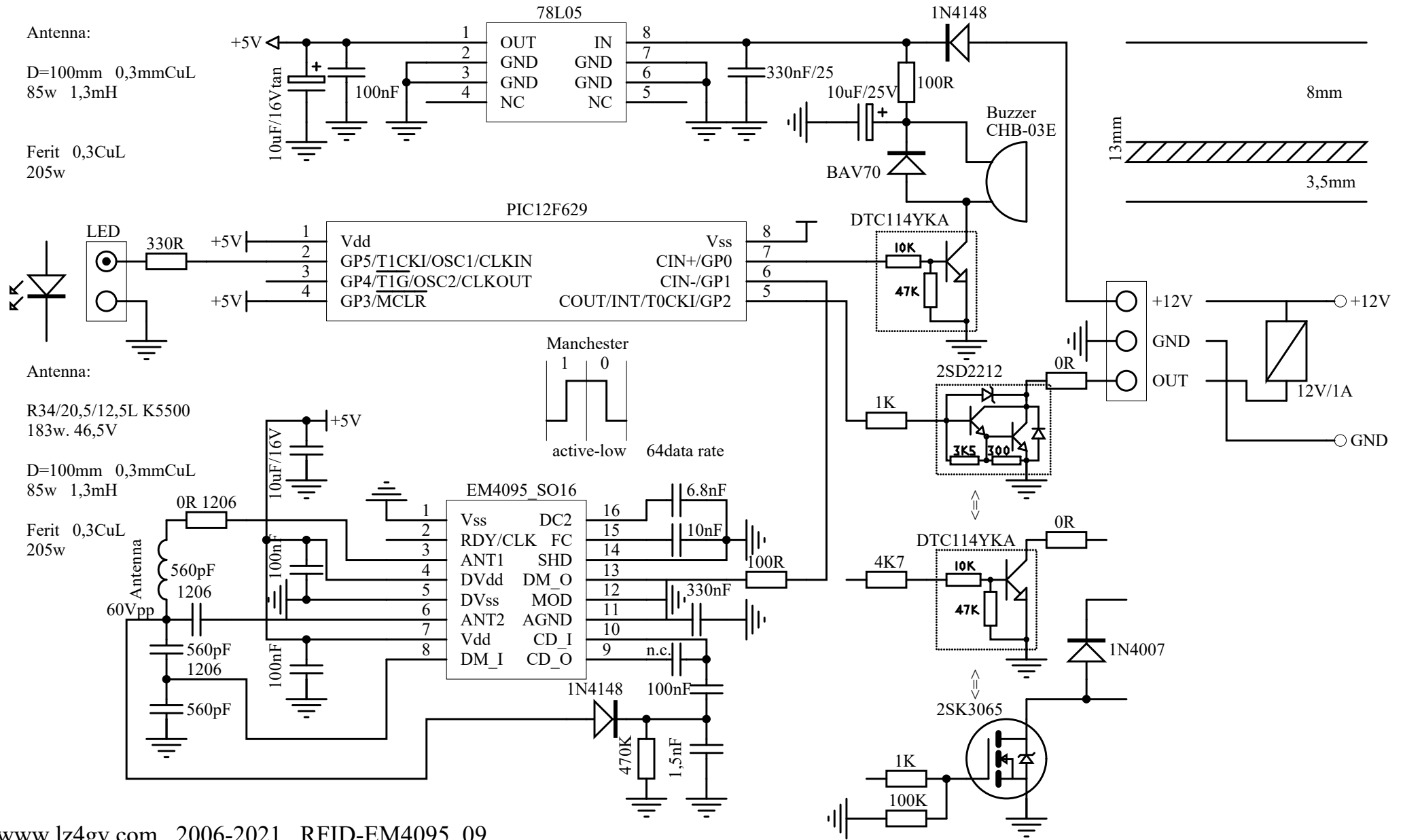
Antenna:
D=100mm 0,3mmCuL
85w 1,3mH
Ferit 0,3CuL
205w
78L05
OUT
GND
GND
NC
IN
GND
GND
NC
+5V
10uF/16Vtan
100nF
330nF/25
10uF/25V
100R
1N4148
BAV70
Buzzer
CHB-03E
8mm
13mm
3,5mm
PIC12F629
Vdd
GP5/T1CKI/OSC1/CLKIN
GP4/T1G/OSC2/CLKOUT
GP3/MCLR
Vss
CIN+/GP0
CIN-/GP1
COUT/INT/T0CKI/GP2
LED
330R
DTC114YKA
10K
47K
+12V
GND
OUT
12V/1A
Manchester
1 0
active-low 64data rate
2SD2212
0R
1K
3K5
300
Antenna:
R34/20,5/12,5L K5500
183w. 46,5V
D=100mm 0,3mmCuL
85w 1,3mH
Ferit 0,3CuL
205w
10uF/16V
0R 1206
Antenna
560pF
1206
60Vpp
100nF
EM4095_SO16
Vss
RDY/CLK
ANT1
DVdd
DVss
ANT2
Vdd
DM_I
DC2
FC
SHD
DM_O
MOD
AGND
CD_I
CD_O
6.8nF
10nF
330nF
n.c.
100R
4K7
0R
1N4007
2SK3065
1K
100K
1N4148
470K
1,5nF