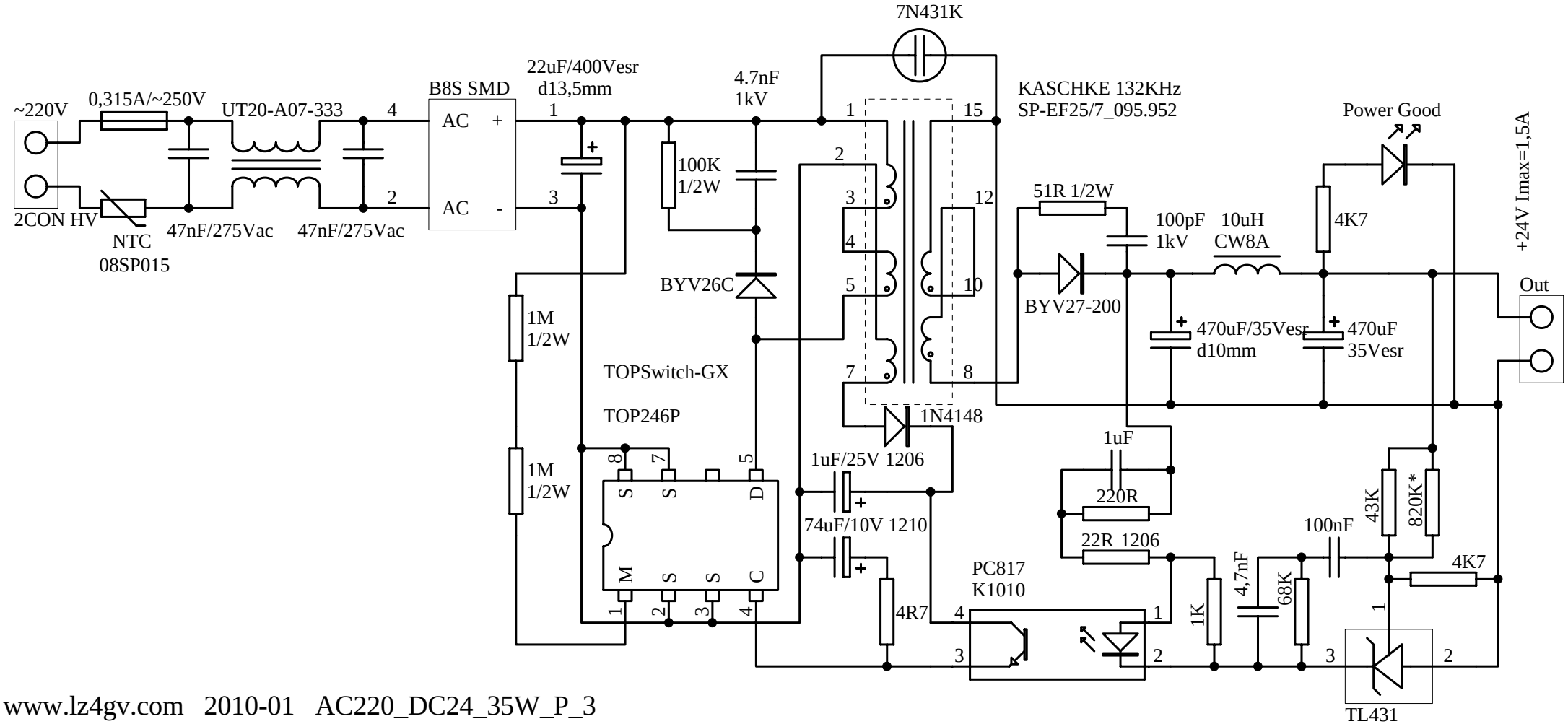TOP242P - TOP246P All DIP-8 132KHz
TOP254P - TOP258P All DIP-8 66KHz Only!!!