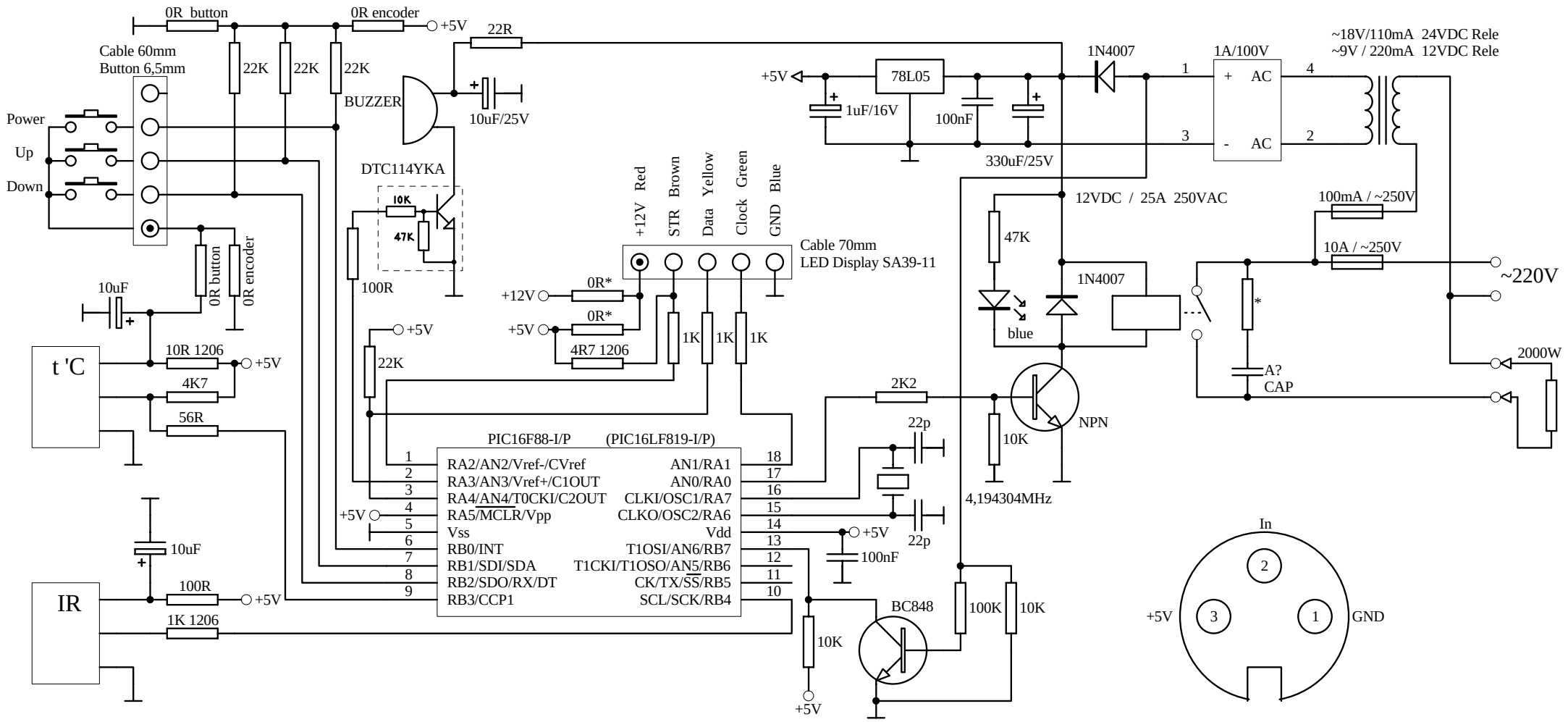

LZ4GV 12-2001 Relay_11