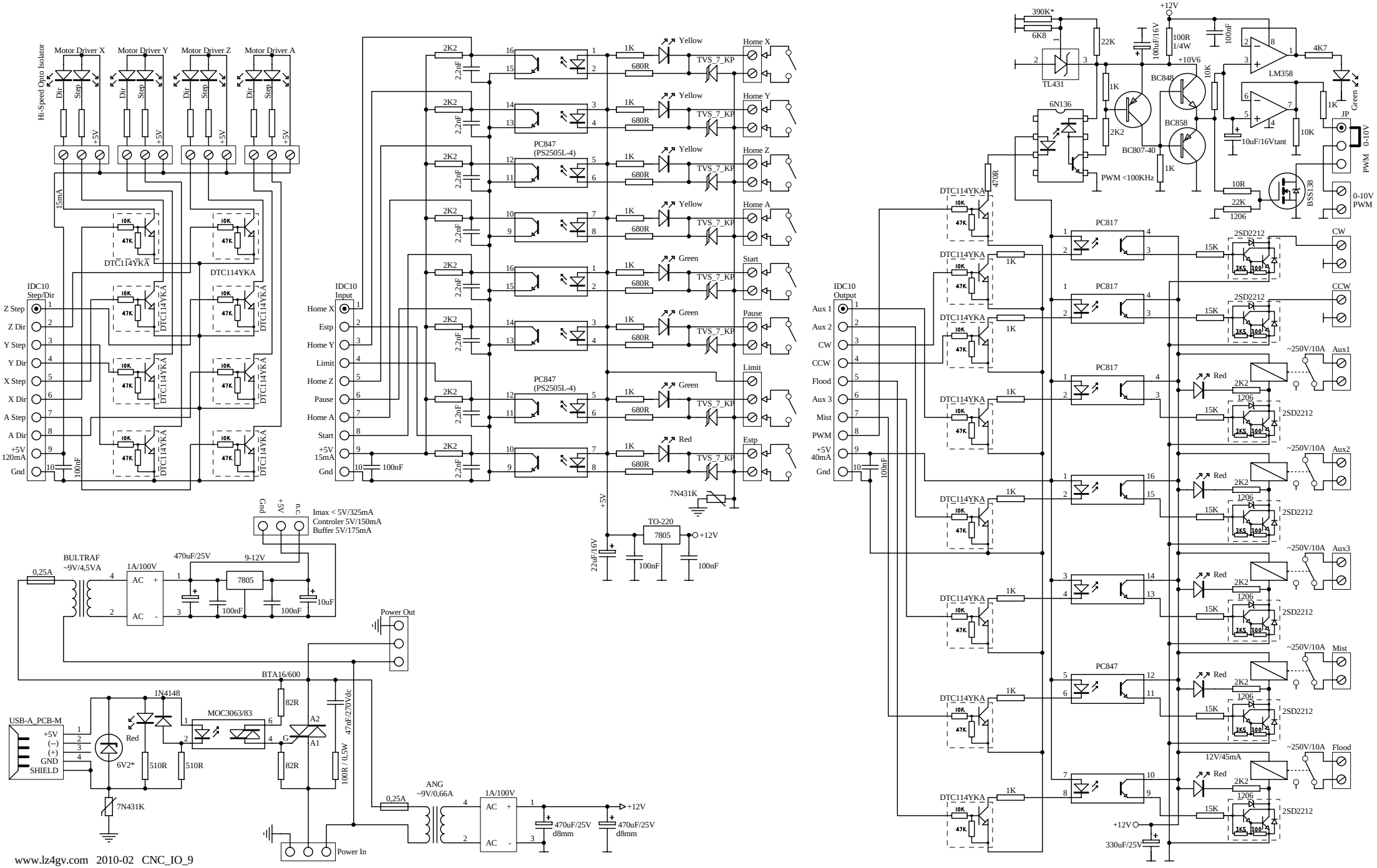

www.lz4gv.com 2010-02 CNC_IO_9