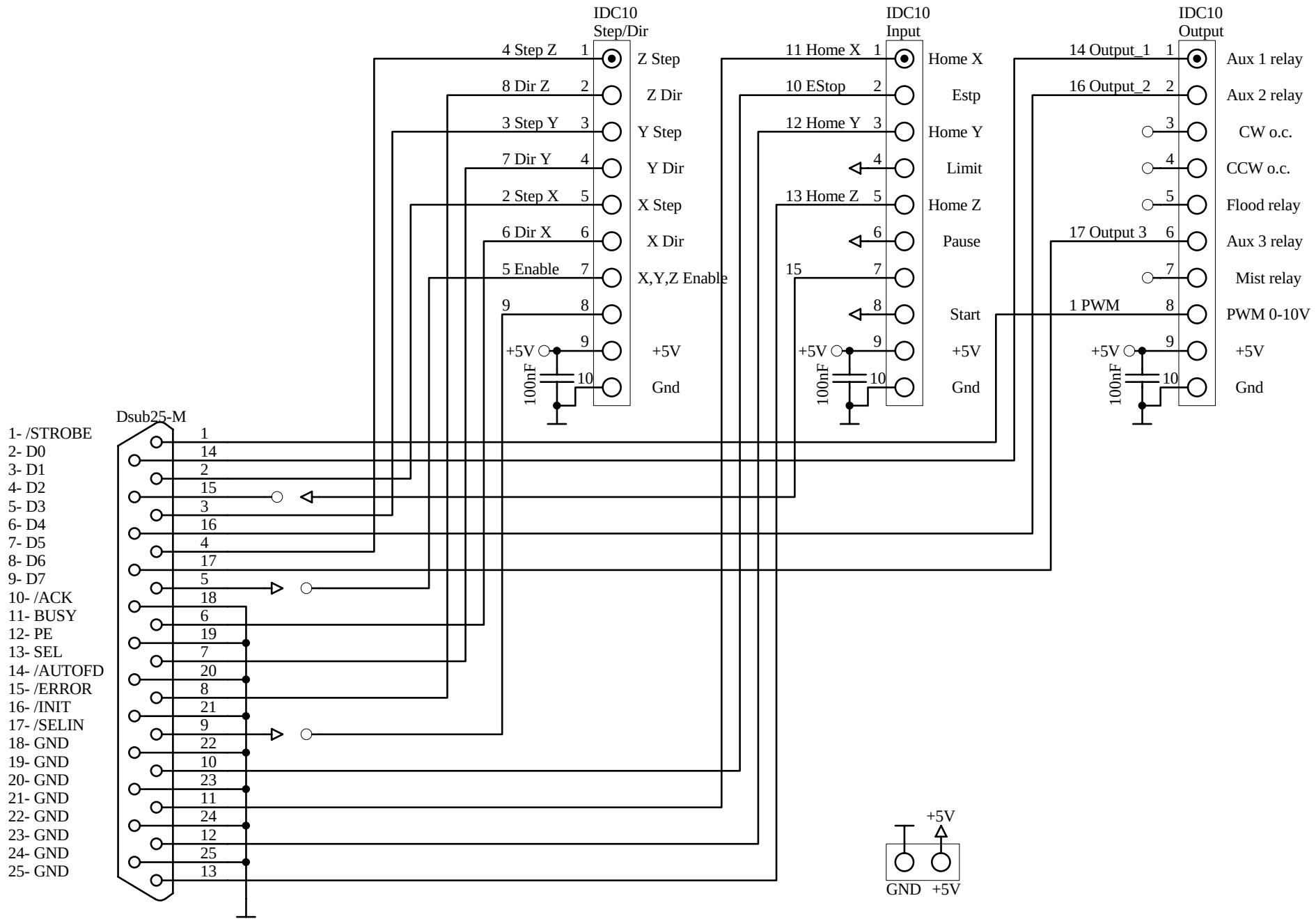

www.lz4gv.com 2010-05 3axis_Mach3_3