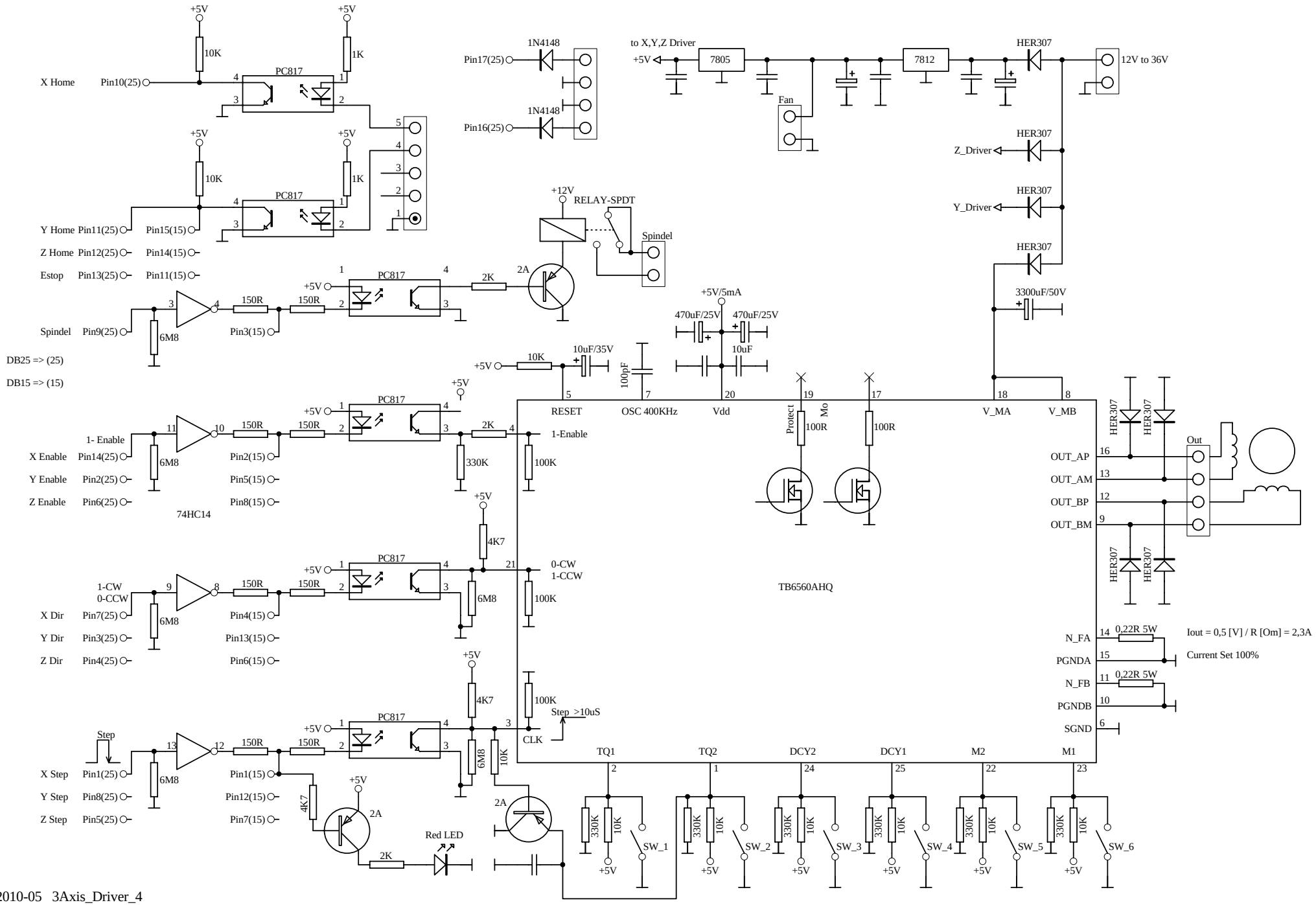

_ 2010-05 3Axis_Driver_4